ITEM NO.:
700001
700018

Leaf
Ventilation

Leaf 1 Air
Leaf 1 Tree

Installation Instructions

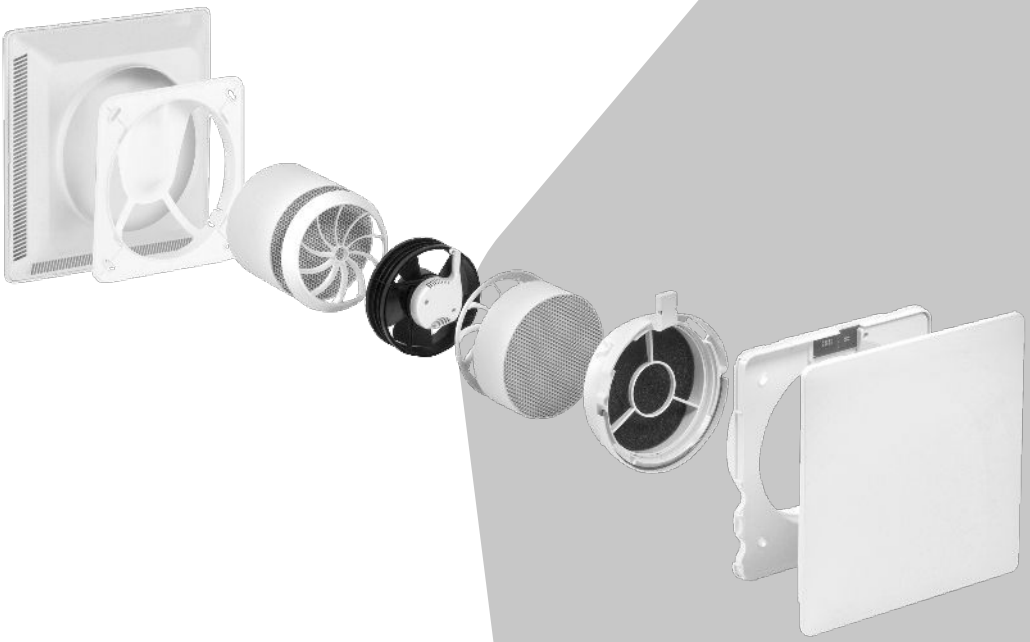

www.leaf-ventilation.de

Inhalt

1. General Information about the Installation Instructions and Product 3
2. Scope of delivery 4
Leaf 1 Air unit set (modules 1–3), item no. 700001 4
Leaf 1 Tree unit set (modules 1–3), item no. 700018 4
3. Core hole drilling 5
3.1 Positioning of the core drill hole 5
3.2 Execution and notes 5
3.3 Execution in brick wall construction 5
3.4 Execution in dry construction 6
4. Installing the Leaf 1 7
4.1 Installation of Leaf 1 shell set (Module 1/3) – internal mounting 7
4.2 Preparing the electrical connection 9
4.3 Installation of Leaf 1 shell set (Module 1/3) – external mounting 9
4.4 Installation of Leaf 1 outer set (Module 2/3) 10
4.5 Installation of Leaf 1 inner set (Module 3/3) 11
4.6 Installation of the electrical connection 12
4.7 Inserting the cartridge 13
5. Commissioning 14
6. General technical information 15
6.1 Technical data 15
6.2 Cleaning and maintenance 15
6.3 Explanation of the circuit diagram 15

1. General Information about the Installation Instructions and Product

- Please read these installation instructions before starting installation.
  Check the goods immediately after receipt for completeness and transport damage.
  Storage must be safe and dry.

- The Leaf 1 is fully integrated into Loxone – Leaf 1 Air via Loxone Air, Leaf 1 Tree via Loxone Tree. Operation is fully automatic based on presence, CO_2, humidity and temperature. Manual control is possible via Loxone Touch Products or the Loxone App. Suitable Loxone sensors (for automatic operation) and Loxone Touch Products (for manual control) are available at shop.loxone.com.
  A 24 V DC power supply (5.4 W per device) is required and not included in the scope of delivery.

Symbols used in these instructions:

This symbol warns you of the risk of injury.

This symbol warns you of the risk of injury caused by electricity.

Warning notices:

Caution!
All work must be carried out with the power switched off. Installation work and electrical installation must be performed by qualified personnel and in accordance with the applicable regulations. The voltage and frequency of the power supply must match the device specifications. A mains disconnection device with all-pole separation and a contact opening of at least 3 mm must be provided on site. Installation in wet rooms must be carried out in accordance with DIN/VDE 0100 T701

Attention! This device may be used by children aged 8 years and older and by persons with reduced physical, sensory or mental capabilities or lack of experience and knowledge if they are supervised or have been instructed in the safe use of the device and understand the resulting hazards. Children must not play with the device. Cleaning and maintenance must not be carried out by children without supervision.

If a room-air-dependent fireplace is operated at the installation location, sufficient supply air must be ensured, especially in airtight building envelopes.
If you have questions, contact your responsible district chimney sweep.

Please note! When planning, installing and operating the device, the approval requirements, applicable building regulations, fire protection regulations and accident prevention regulations must be observed. Further information and approval documents can be found at: www.leaf-ventilation.de

To prevent tampering and damage, the device should be installed at a height of at least 2.30 m from ground level (outdoor installation). The manufacturer accepts no liability for damage caused by improper installation, connection or use. The warranty is void in such cases. Statutory warranty periods apply according to the general terms and conditions.

2. Scope of delivery

Leaf 1 Air unit set (module 1-3), item number 700001

Leaf 1 Tree unit set (module 1-3), item number 700018

Leaf 1 shell set 50 module 1/3 (item no. 700025)

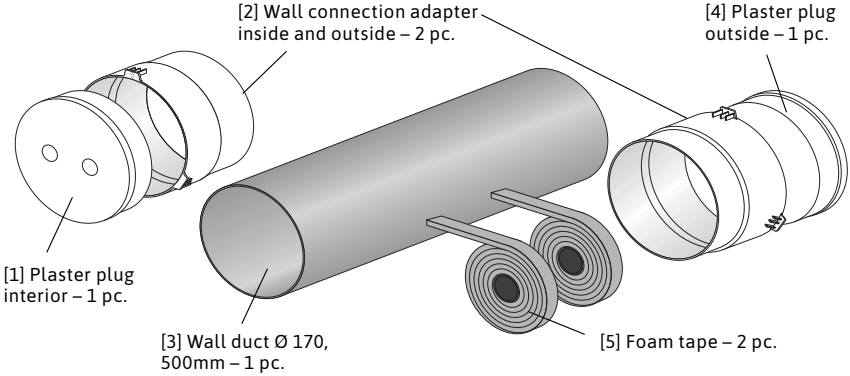

Leaf 1 outer set module 2/3 (item no. 700049)

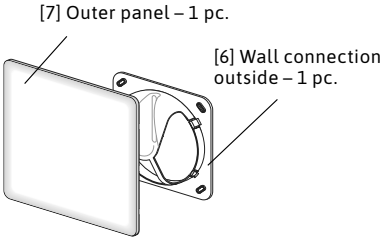

Note:
As an alternative to module 2/3, the **Leaf reveal element** can be used, which is available separately in the shop (see page 6).

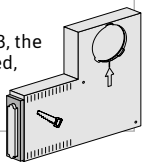

Leaf 1 Air/ Tree inner set module 3/3 (Air: Item no. 700056; Tree: Item no. 700063)

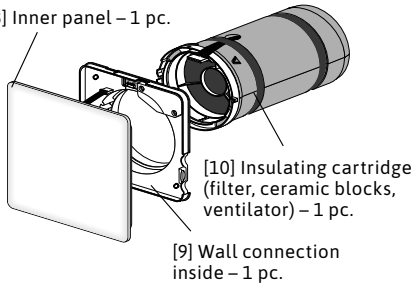

3. Core hole drilling

3.1 Positioning of the core drill hole

The position of the core drill hole (Ø 180–182 mm) should be selected in such a way that it is not located directly near a corner. We recommend a distance of approx. 300 mm from the ceiling and 1100 mm from the nearest wall (Fig. 1).
The Leaf 1 devices should be installed with the specified minimum distance in order to prevent sound bundling and reflection.
The devices should be installed at a distance of at least 1 m from each other to prevent possible short-circuit ventilation.

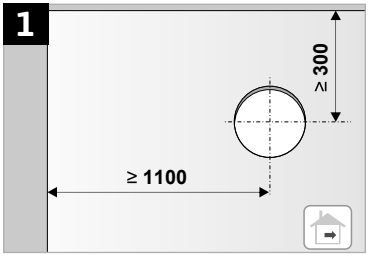

3.2 Execution and notes

When drilling the core hole, ensure a slope of 2° from inside to outside, so that any condensation that may occur cannot enter the living space.
After drilling, please clean the opening and ensure that dust or stones do not hinder safe installation (Fig. 2).

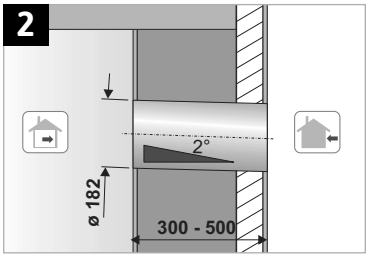

3.3 Execution in brick wall construction

The core drill hole is created through the masonry, unplastered wall after the insulation has been installed from the outside.
For wet construction walls that do not require separate insulation (e.g. 36 cm aerated concrete blocks), the core drill hole is created in the wall that is unplastered on both sides.
In the case of refurbishment, the core drill hole is created through the already plastered wall.
In addition, the Leaf mounting block (Fig. 3) can also be used in wet construction. This can be installed like a standard brick and already has a pre-set slope of 2°.

3.4 Execution in dry construction

In drywall construction, there is the possibility (depending on the wall cut-out) to drill a hole with a diameter of 180 mm and seal it, or to select a rectangular cut-out, insert the Leaf mounting block (Fig. 3) and bond it in a diffusion-tight manner.
The mounting block already has a pre-set slope of 2° and also provides insulating and sound-dampening properties.

Note:
The **Leaf mounting block for new construction** is available in the Leaf Shop under item numbers **701053** (suitable for wall thicknesses up to 500 mm) and **701046** (suitable for wall thicknesses up to 365 mm). The **Leaf reveal element** is also available in the Leaf Shop under item number 704177.

4 Installing the Leaf 1

4.1 Installation of the Leaf 1 shell set (module 1/3) - internal mounting

The plaster spacers of the wall connection adapters [2] are broken off to the required length (Fig. 4), so that a smooth transition can be created when the interior wall is later plastered.

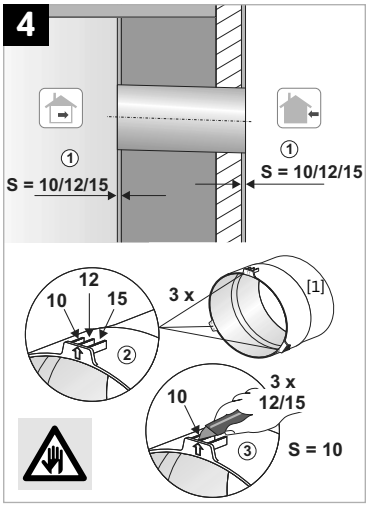

In the next step, the wall duct pipe [3] must be shortened to the length of the final wall thickness – including internal and external plaster – minus 13 mm (Fig. 5).
Due to the design of the wall connections, these 13 mm must be deducted, otherwise the installation of the entire set cannot be ensured.

The correct length of the wall duct pipe is:

Final wall thickness _____mm
+ internal plaster _____ mm
+ external plaster _____mm
- 13 mm
= length of the wall duct pipe

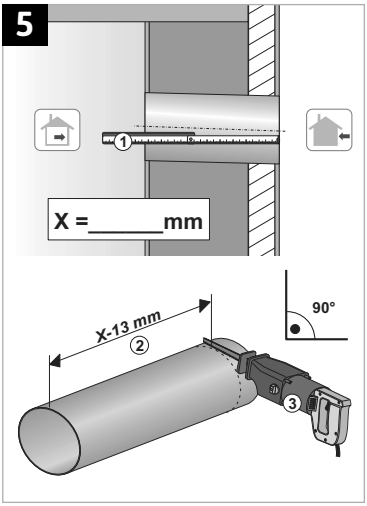

We recommend connecting the wall connection adapters and the wall duct pipe using a suitable industrial adhesive tape (Fig. 6).

For this purpose, the internal plaster plug (identifiable by the arrow on the front) [1] is covered with the supplied foam sealing strip [5] (Fig. 6.1), and then the wall connection adapter is pushed onto the wall duct pipe (Fig. 6.2). The wall duct pipe, together with the wall connection adapter flush with the pipe edge, is placed over the plaster plug (Fig. 6.3), and the wall connection adapter is then bonded (Fig. 6.4).

For a diffusion-tight installation, we recommend using compression sealing tape (e.g. 15/4-10). The compression tape is applied around the smaller diameter of the wall connection adapter (Fig. 6.5). Afterwards, the prepared wall duct pipe is immediately pushed into the core drill hole as far as the stop of the plaster spacers.

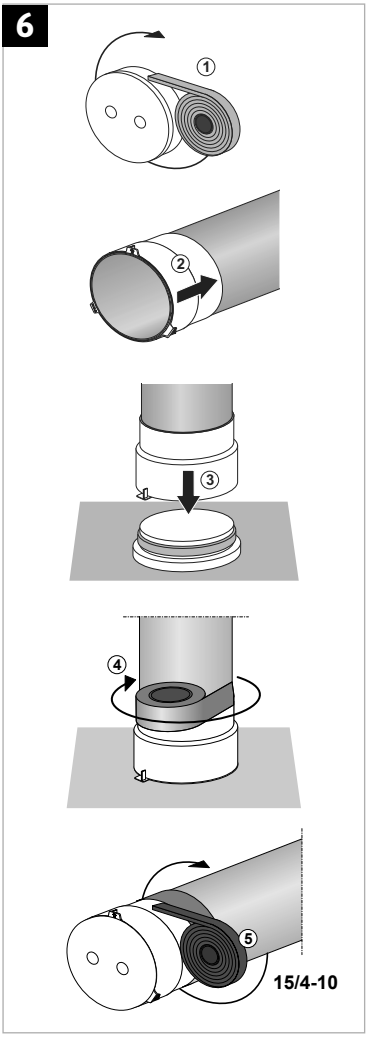

Attention! Ensure that the arrow on the adapter points UPWARDS (Fig. 7).

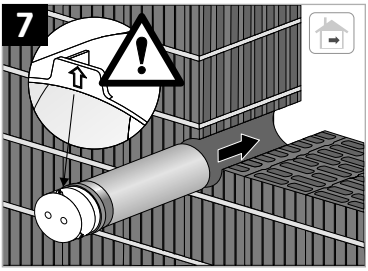

4.2 Preparing the electrical connection

For the power supply or bus connection (0.8 mm²), a cable outlet must be provided on site. For positioning the cable outlet, use a spirit level and maintain an exact distance of 100 mm from the center of the core drill hole. This ensures that the cable fits through the designated cable routing of the wall connection plate of the internal cover (Fig. 8).

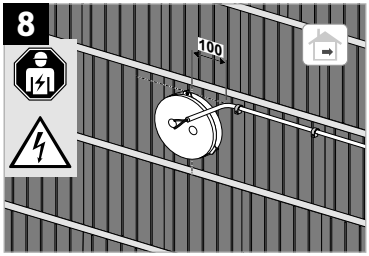

Attention! Have this step carried out only by qualified personnel and ensure that the line is de-energized.

4.3 Installation of the Leaf 1 shell set (module 1/3) - external mounting

To fix the Leaf 1 basic set to the external wall, the plaster spacers are broken off according to the desired plaster layer thickness, and compression sealing tape is applied around the smaller diameter of the wall connection adapter. Then immediately push the wall connection adapter onto the protruding wall duct pipe (Fig. 9).

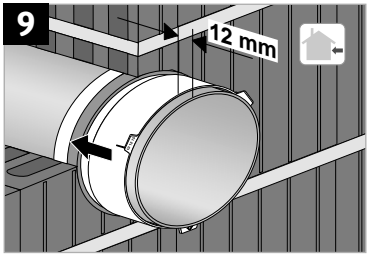

Attention! Ensure that the arrow on the adapter points DOWNWARDS.

Close the wall duct pipe with the external plaster plug [4] (Fig. 10).

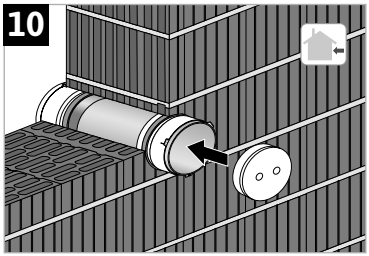

4.4 Installation of the Leaf 1 outer set (module 2/3)

To install the Leaf 1 external set, remove the plaster plug from the wall duct pipe (Fig. 11).

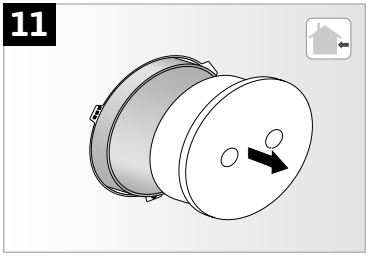

Then remove the wall connection [6] from the external cover [7] and slide it over the wall duct pipe. Use the wall connection as a template and mark the drill holes for fastening (Fig. 12).

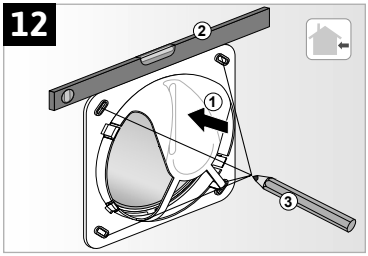

Ensure that the wall connection is correctly positioned and check this using a spirit level. Remove the wall connection from the pipe again and insert the plaster plug back into the pipe to prevent drilling dust from entering the pipe. After drilling the four holes, place the wall connection back onto the pipe and fix it to the exterior wall using suitable plugs and screws appropriate for the wall material (Fig. 13).

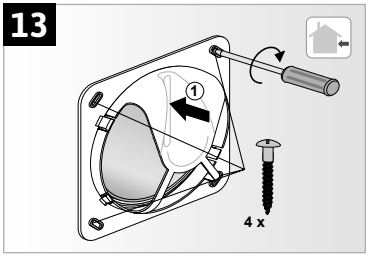

In the next step, place the external cover [7] onto the wall connection with the closed edge facing upwards – ensure that the snap connections engage (Fig. 14).

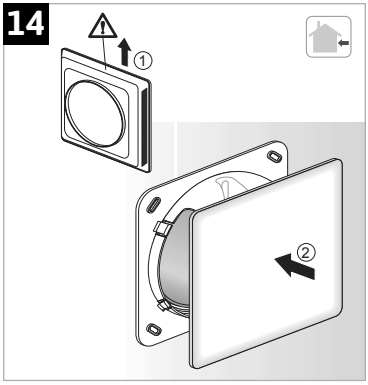

4.5 Installation of the Leaf 1 inner set (module 3/3)

In this step, please remove the internal plaster plug [1] from the internal wall connection adapter (Fig. 15).

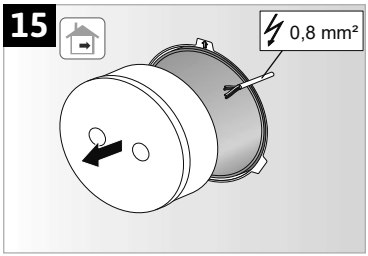

Detach the internal cover from the wall connection [9]. Press the snap-on connections (right and left), pull the internal cover slightly forward and lift it upwards off the wall connection (Fig. 16).

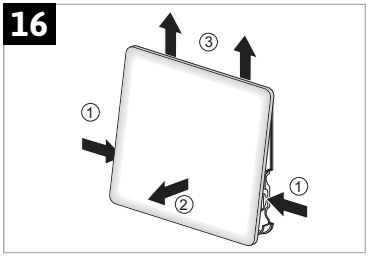

Remove the cover over the cable feed-through (PCB cover) by loosening the Phillips screws (Fig. 17).

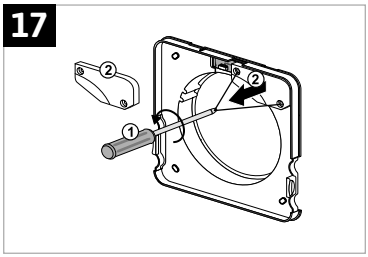

Place the wall connection onto the wall duct pipe. Ensure correct positioning using a spirit level and mark the drill holes. Then remove the wall connection again (Fig. 18).

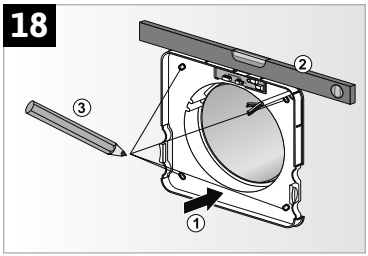

Now drill the holes and insert suitable wall plugs according to the wall structure. Then place the wall connection back onto the wall duct pipe, ensuring correct positioning and that the cable routing passes through the designated opening. Now fix the wall connection to the wall using four screws (Fig. 19).

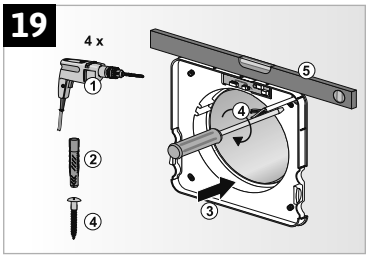

4.6 Installation of the electrical connection

After that, connect the PCB on the internal wall connection to the power supply (Fig. 20). Two fixed connection points are installed here. The second connection point is intended for forwarding the power supply and control signals. An additional Leaf 1 can be connected here.

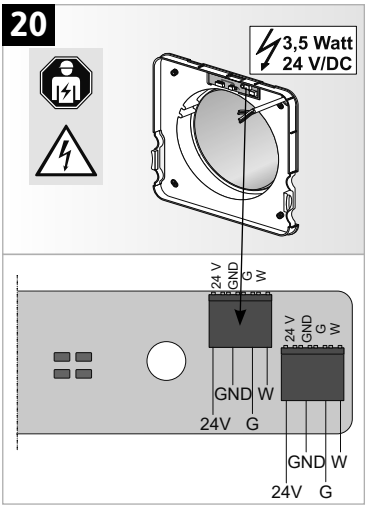

Attention! Have this step carried out only by qualified personnel and ensure that the line is de-energized.

Now ensure that the wall duct pipe is clean and free of contamination.

Screw the PCB cover onto the designated mounting on the PCB (Fig. 21).

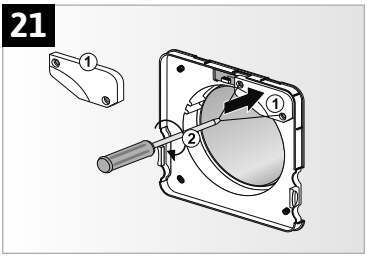

Then switch the fuse back on (Fig. 22).

4.7 Inserting the cartridge

Then take the cartridge [10] and push it into the pipe as far as it will go (Fig. 23).

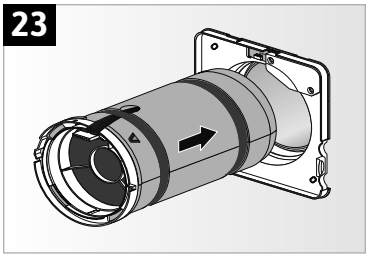

Now the 8-wire connector of the cartridge can be plugged into the designated socket on the interface PCB (Fig. 24).

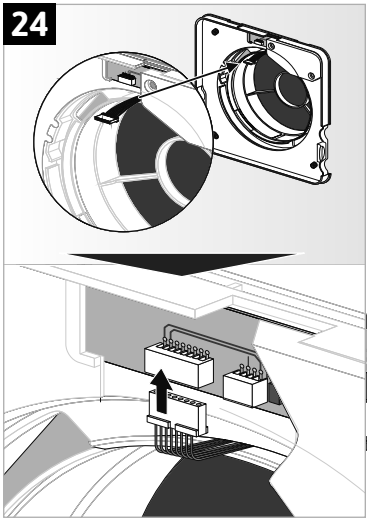

Now connect the 4-wire connector of the cover to the designated socket on the interface PCB.

Afterwards, the device will emit three short beeps and the cover will move back to the complete zero position (humming sound) (Fig. 25).

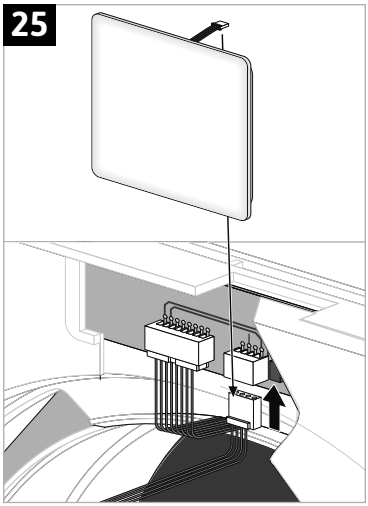

The cover can now be placed onto the wall connection (Fig. 26).

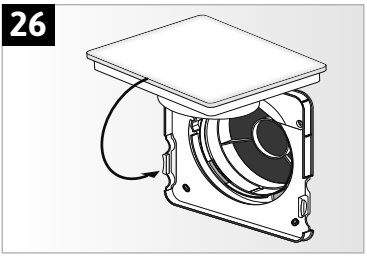

Close the cover with slight pressure until the snap-on connection engages (Fig. 27).
If the cover does not engage immediately, please check that the wall connection is correctly positioned, as tension may occur due to uneven walls.

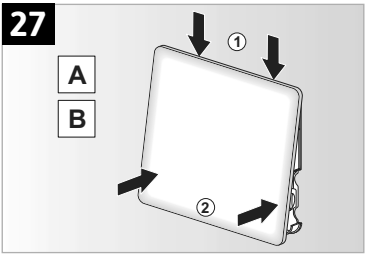

5. Commissioning

The integration into Loxone is documented in the Loxone Knowledge Base:
- Leaf 1 Tree: https://www.loxone.com/enen/kb/leaf-tree/
- Leaf 1 Air: https://www.loxone.com/enen/kb/leaf-air/

More infos about the automatic operation can be found here:
https://www.loxone.com/enen/kb/leaf-ventilation/

Detailed commissioning & automation know-how is part of the Loxone Partner training program. (https://www.loxone.com/enen/businesspartner/training/)

6. General technical information

6.1 Technical data

Protection class/type:	IPX0
Mains voltage:	24 V DC
Power consumption:	5.4 watts
Noise level:	43 dB(A)
Output:	max. 44 m³/h
Permissible operating temperature:	45 °C
Minimum outdoor temperature:	- 20 °C
Minimum wall thickness:	300 mm
Maximum wall thickness:	1.000 mm (Leaf 1 shell set 100)
Size of the design cover:	270 x 270 mm
Energy efficiency class:	A
Weight:	4.5 kg

6.2 Cleaning and maintenance

Detailed instructions for cleaning and maintenance can be found in the download section at: www.leaf-ventilation.de/service

6.3 Explanation of the circuit diagram

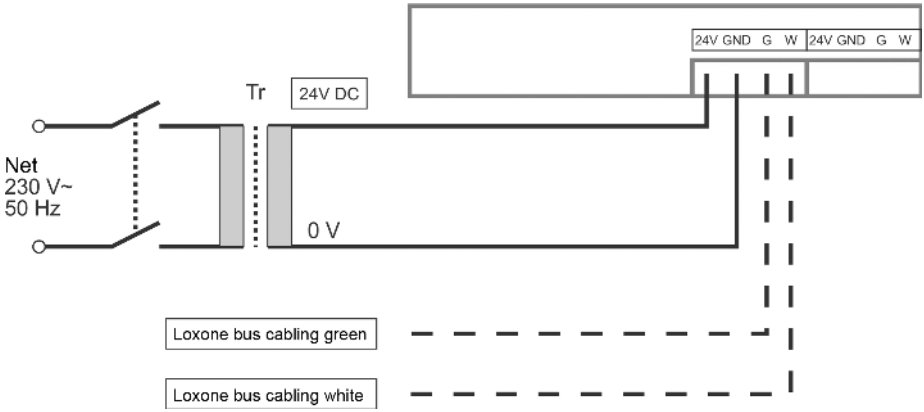

a brand of
Marley Deutschland GmbH
Adolf-Oesterheld-Str. 28
31515 Wunstorf / Germany

Tel.: +49 5031/53-600
Mail: info@leaf-ventilation.de
www.leaf-ventilation.de

05/26 · Subject to technical changes